RoHS 2.0

REV.	ECN NO.	DESCRIPTION	DATE	DESIGN
A1.	/.	重新核对图面	21.01.03	LiHui

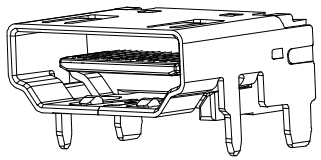

3D VIEW

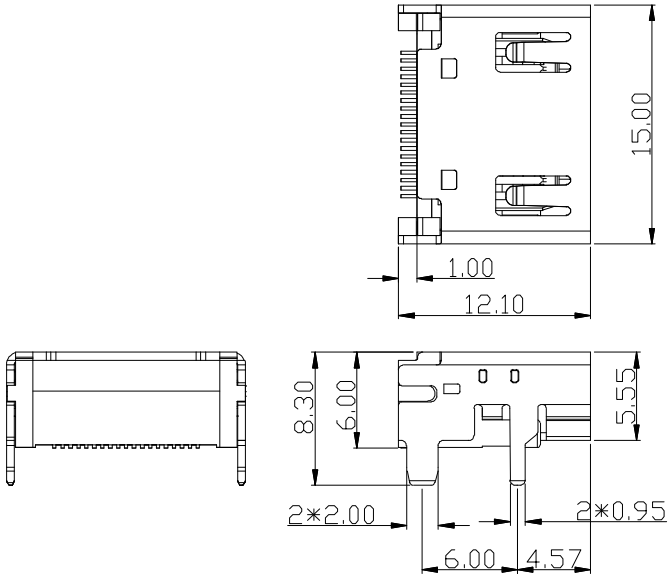

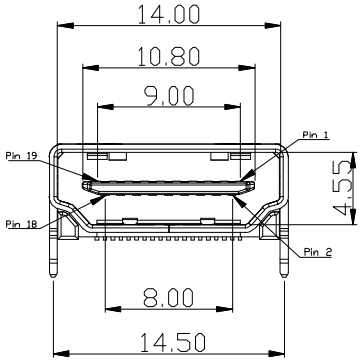

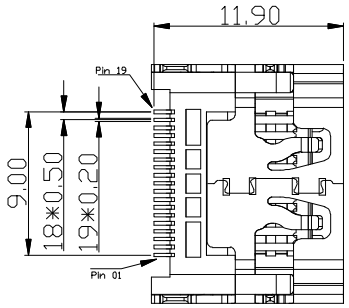

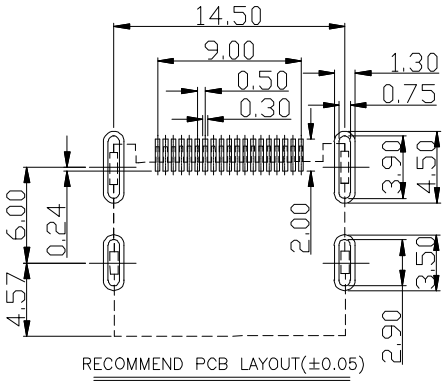

RECOMMEND PCB LAYOUT(±0.05)

NOTES:

1. MATERIAL:
   1.1. HOUSING: LCP,COLOR IS GRAY,HIGH TEMPERATURE PLASTIC;
   1.2. CONTACT: BRASS(H65 T=0.20mm);
   1.3. SHELL: COLD ROLLED IRON(SPCC,T=0.50mm);
2. FINISH:
   2.1. TERMINAL:
   CONTACT AREA: GOLD PLATED G/Fu"(2.0 AREA) ;
   SOLDER AREA: PLATED OVER TIN;
   2.2. SHELL: NI PLATED OVER ALL ;
4. ELECTRICAL:
   4.1. VOLTAGE RATING: 40 VAC RMS;
   4.2. CURRENT RATING: 0.5 AMP;
   4.3. CONTACT RESISTANCE: 30mΩ MAX.;
   4.4. WITHSTAND VOLTAGE: 500 VAC RMS 50(60)Hz,1MIN.;
   4.5. INSULATION RESISTANCE: 100MEGOHMS MIN @500V DC;
5. MECHANICAL:
   5.1. MATING FORCE: 44.1N MAX.;
   5.2. UNMATING FORCE: 9.8N MIN;
   5.3. OPERATING LIFE: 10000 CYCLES MIN.;
6. ENVIRONMENTAL:
   6.1. STORAGE TEMPERATURE RANGE:-40°C~+85°C;
   6.2. OPERATION TEMPERATURE RANGE:-25°C~+70°C;

深圳市华灿天禄电子有限公司

UNLESS OTHERWISE, GENERAL TOLERANCE:
X.xx ±0.10
X.xx ±0.20
X.x ±0.30

ANGULAR:
X.xx° ±1°
X.x° ±3°
X.° ±5°

NAME: HDMI 铁无点镍2.0

P/N: 09.02.02.003

DWG NO.: HDMI-01

THIRD ANGLE PROJECTION

UNIT:	SCALE	SIZE:	SHEET:	REV.:
mm	1:1	A4	1/1	A1

DRAWN: CHECKED: APPROVED